S2770/3370/3970BE

COMPACT BI-ENERGY SCISSOR LIFTS

- Compact bi-energy scissor lifts
- Suitable for interior and exterior use
- Non-marking, high grip tyres
- Easy to operate
- Ideal for construction sites

snorkel

www.snorkellifts.com

COMPACT BI-ENERGY SCISSOR LIFTS

S2770/3370/3970BE

DIMENSIONS	S2770BE	S3370BE	S3970BE
Max. working height	10.23m	12.1m	13.9m
Max. platform height (**A**)	8.23m	10.1m	11.9m
Platform size (stowed) (**B**)	2.71m x 1.65m	2.71m x 1.65m	2.71m x 1.65m
Platform size (extended) (**C**)	3.9m x 1.65m	3.9m x 1.65m	3.9m x 1.65m
Deck extension	1.2m	1.2m	1.2m
Overall width (**D**)	1.8m	1.8m	1.8m
Stowed length (**E**)	3.4m	3.4m	3.4m
Stowed height (**F**)	2.59m	2.7m	2.95m
Min. height (guardrails folded)	1.83m	2.0m	2.13m
Ground clearance	330mm	330mm	330mm

PERFORMANCE			
Platform capacity (SWL)	580kg	450kg	350kg
Max. drive height	8.23m	10.1m	11.9m
Max. wind speed	12.5m/s	12.5m/s	12.5m/s
Max. drive speed (stowed)	4.5km/h (engine)		
Max. drive speed (elevated)	0.5km/h (engine)	0.3km/h (engine)	0.3km/h (engine)
Raise/lower time	50/47 sec (engine) 65/47 sec (battery)		
Gradeability (engine)	35%	30%	30%
Gradeability (battery)	25%	25%	25%
Max. outrigger levelling, front to rear	6°	6°	6°
Max. outrigger levelling, side to side	10°	10°	10°
Inside turning radius	2.44m	2.44m	2.44m
Outside turning radius	4.75m	4.75m	4.75m
Tyres	27 x 10.5 foam filled, non-marking		
Controls	proportional joystick		
Drive system	4 wheel drive		

POWER	
Power source	Kubota D-902 water cooled diesel 22.5hp and 4 x 6v 305Ah batteries

WEIGHT			
Weight	3,099kg	3,919kg	4,090kg

TURNING RADIUS

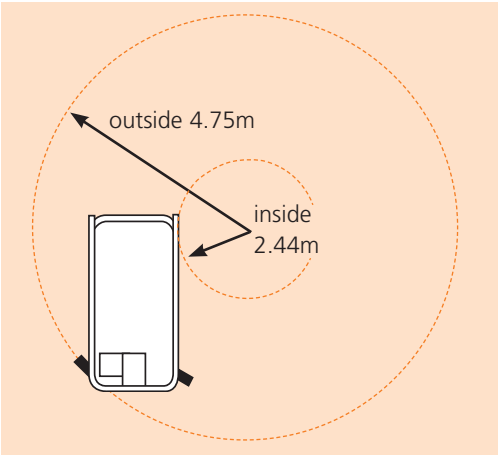

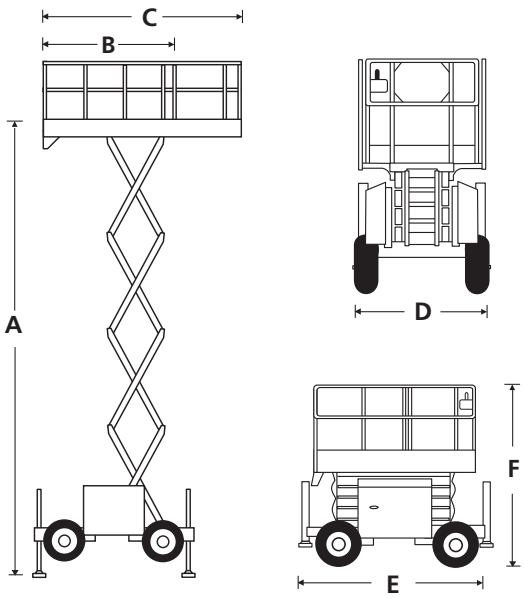

STANDARD FEATURES

- DC and diesel power - for indoor & outdoor work
- 4 wheel drive
- 4 hydraulic outriggers with automatic levelling
- Roll-out deck extension
- Non-marking foam filled tyres
- Proportional controls
- Flashing amber light
- Oscillating axle
- Power line to platform
- Drive motion alarm
- Descent alarm
- Fold-down guardrails
- Hour meter & on-board diagnostics display
- Dual lanyard attachment points
- Manual lowering valve
- 2 year parts & labour, 5 year structural warranty
- CE approved

OPTIONS

- Special paint colours
- Hydraulic generator 110V/240V
- Nylon spreader pads (set of 4)
- Environmental hydraulic oil

snorkel
Vigo Centre, Birtley Road,
Washington, Tyne & Wear,
NE38 9DA, U.K.
t: +44 (0) 845 1550 057
e: sales@snorkellifts.com
www.snorkellifts.com

CE Specification
© Snorkel 2018

Specifications subject to change without notice. Photos and diagrams in this brochure are for promotional purposes only. Refer to appropriate Snorkel operators manual for detailed instructions on the proper use and maintenance.

02/2018