TM12E

SELF-PROPELLED TELESCOPIC MAST LIFT

- Industry-leading self-propelled telescopic mast lift
- Versatile, robust and simple to use
- Drives through a standard doorway
- Smooth & efficient electric drive
- Ideal for many applications – from construction to stockpicking!

snorkel

www.snorkellifts.com

SELF-PROPELLED TELESCOPIC MAST LIFT TM12E

DIMENSIONS	TM12E
Max. working height	5.65m
Max. platform height (**A**)	3.65m
Platform size (stowed)	0.74m x 0.96m
Platform size (extended) (**E**)	0.74m x 1.41m
Deck extension length	0.45m
Overall width (**B**)	0.76m
Overall length (**D**)	1.37m
Stowed height (**C**)	1.67m
Ground clearance	76mm

PERFORMANCE	
Platform capacity (SWL)	227kg
Max. drive height	3.65m
Max. wind speed	12.5m/s
Max. drive speed (stowed)	4.0km/h
Max. drive speed (elevated)	0.6km/h
Raise/lower time	12.5/10.5sec
Gradeability	25%
Max. operating slope (side to side)	2°
Max. operating slope (front to back)	2°
Inside turning radius	0m
Outside turning radius	1.4m
Tyres	322mm non-marking rubber
Parking brake	2 wheel, spring applied, electric release
Drive system	dual DC motors
Controls	proportional

POWER	
Power source	24V 220Ah batteries
Battery charger	20 amp

WEIGHT	
Weight	884kg

TURNING RADIUS

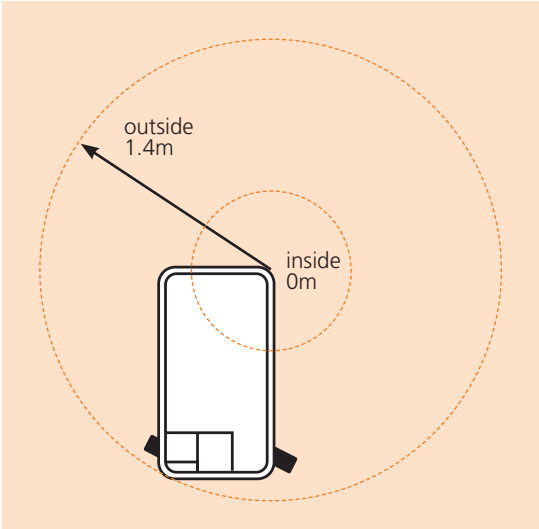

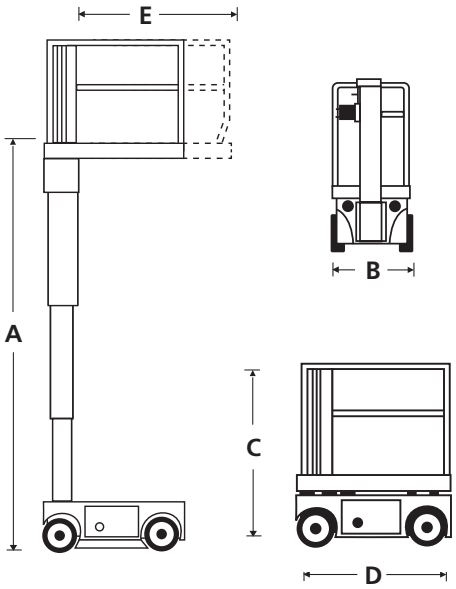

STANDARD FEATURES

- Roll-out deck extension
- Proportional controls
- Saloon-door style entry gates
- Descent & tilt alarms
- Emergency lowering at chassis controls
- Non-marking rubber tyres
- Crane lift points
- Horn
- 2 persons + equipment capacity indoor
- 1 person + equipment capacity outdoor
- Selectable motion alarm
- Integrated battery charger 110V 20A
- Hour meter & on-board diagnostics display
- 2 year parts & labour, 5 year structural warranty
- CE approved

OPTIONS

- Special paint colours
- Environmental hydraulic oil
- Order picker tray

snorkel
Vigo Centre, Birtley Road,
Washington, Tyne & Wear,
NE38 9DA, U.K.
t: +44 (0) 845 1550 057
e: sales@snorkellifts.com
www.snorkellifts.com

CE Specification
© Snorkel 2018

Specifications subject to change without notice. Photos and diagrams in this brochure are for promotional purposes only. Refer to appropriate Snorkel operators manual for detailed instructions on the proper use and maintenance.

02/2018